Glock

Fidget Keychain – Slide-Action Toy

ASSEMBLY GUIDE

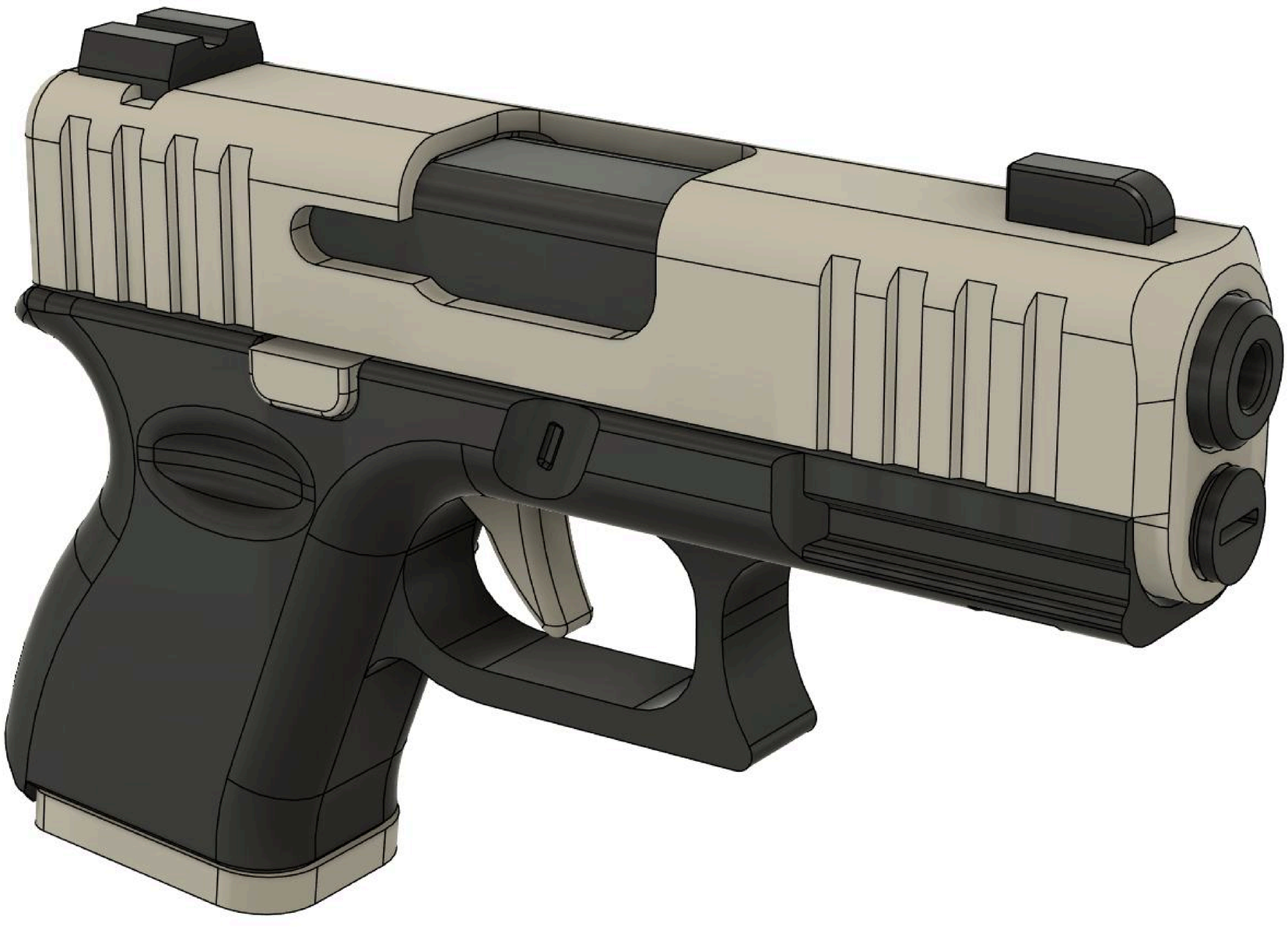

Glock

Fidget Keychain – Slide-Action Toy

ASSEMBLY GUIDE

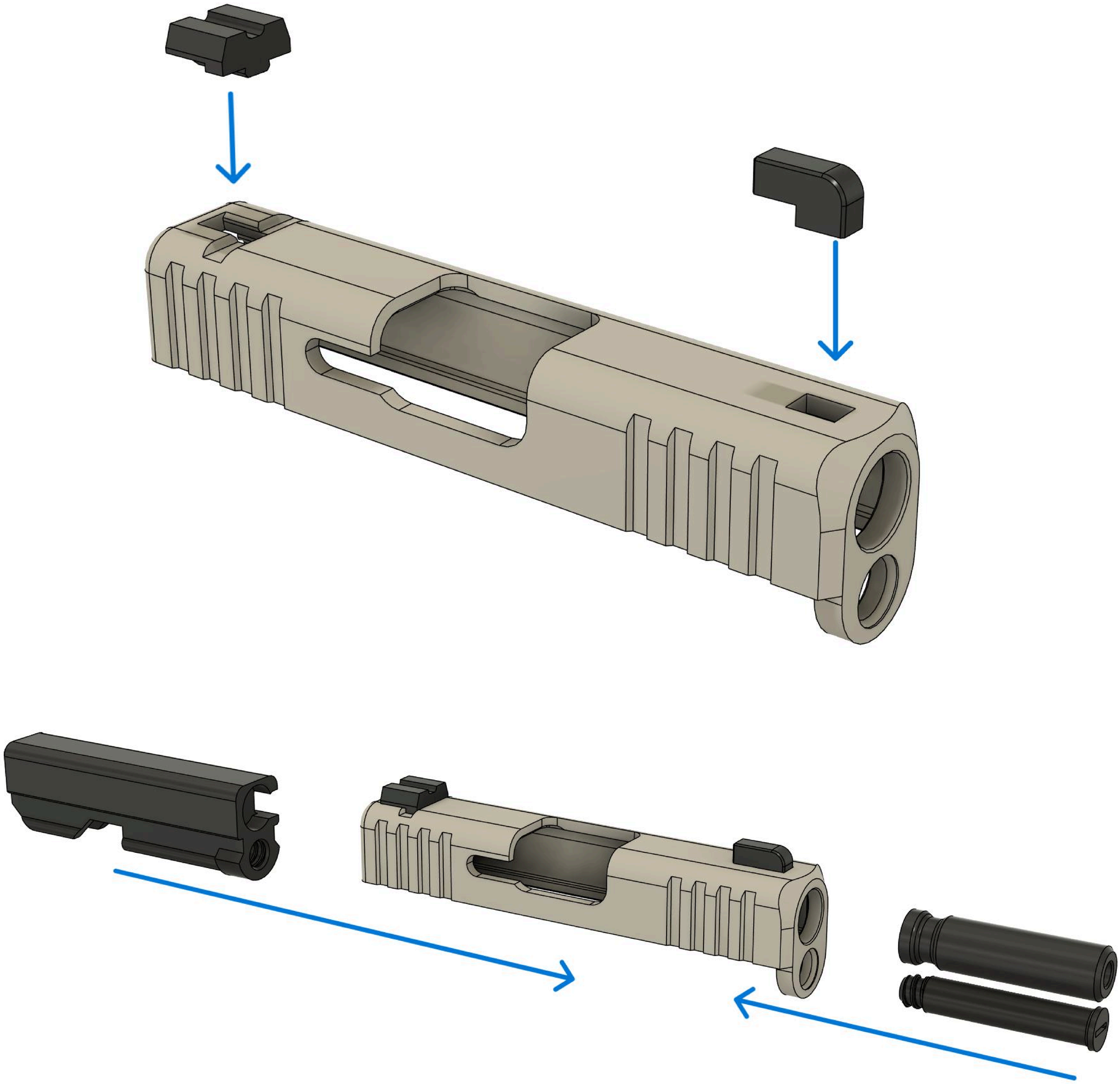

Glock

Fidget Keychain – Slide-Action Toy

ASSEMBLY GUIDE





Rubber Band Installation

1. **Place the rubber band over the barrel and stretch it along the guide groove.**
2. **Install the slide and hook the rubber band onto the tab located at the rear of the slide.**
3. **Tighten the screw underneath the barrel to secure the assembly.**

That's it! The slide should now return automatically after being pulled back.

Glock

Fidget Keychain – Slide-Action Toy

ASSEMBLY GUIDE

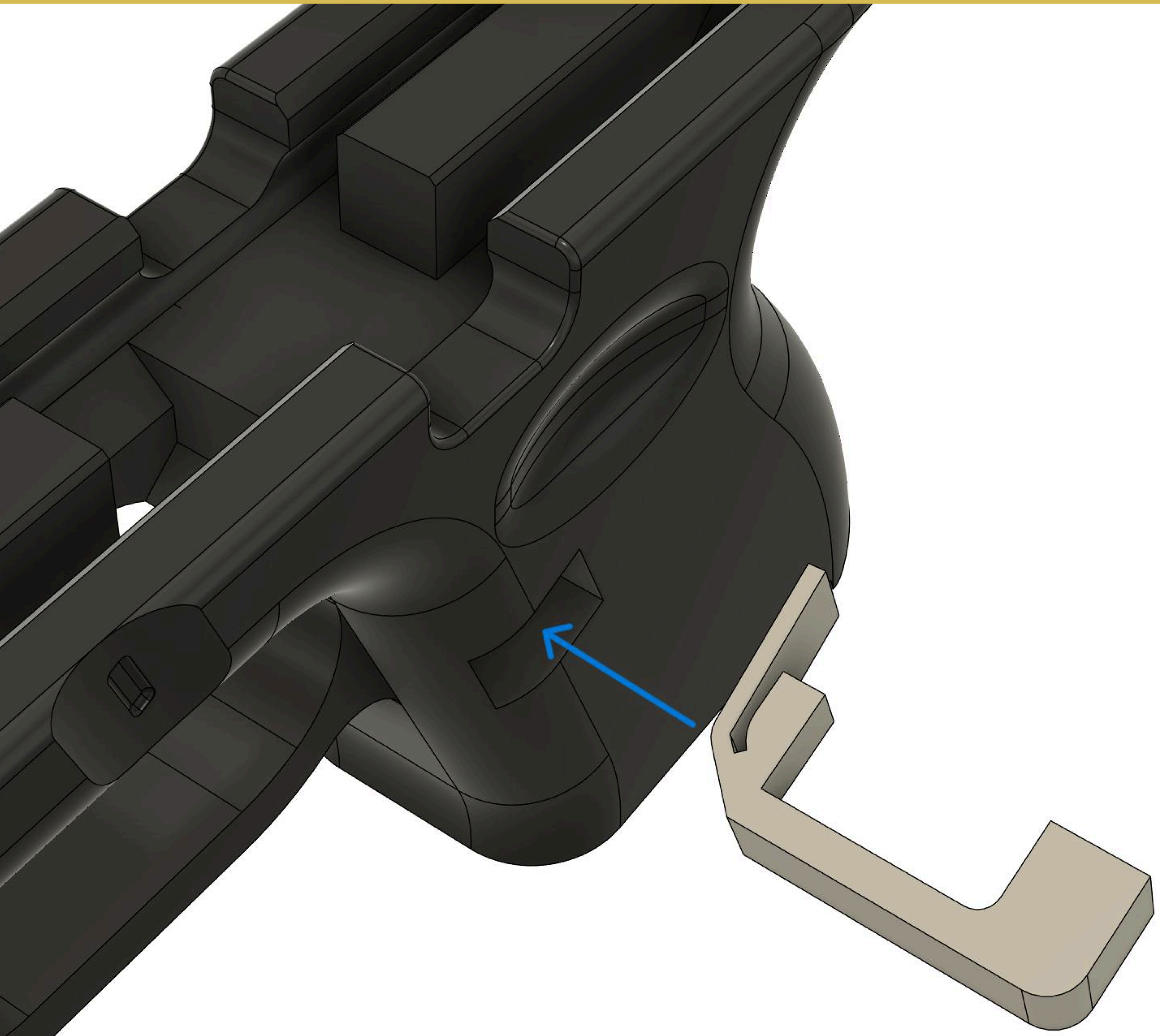

Glock

Fidget Keychain – Slide-Action Toy

ASSEMBLY GUIDE

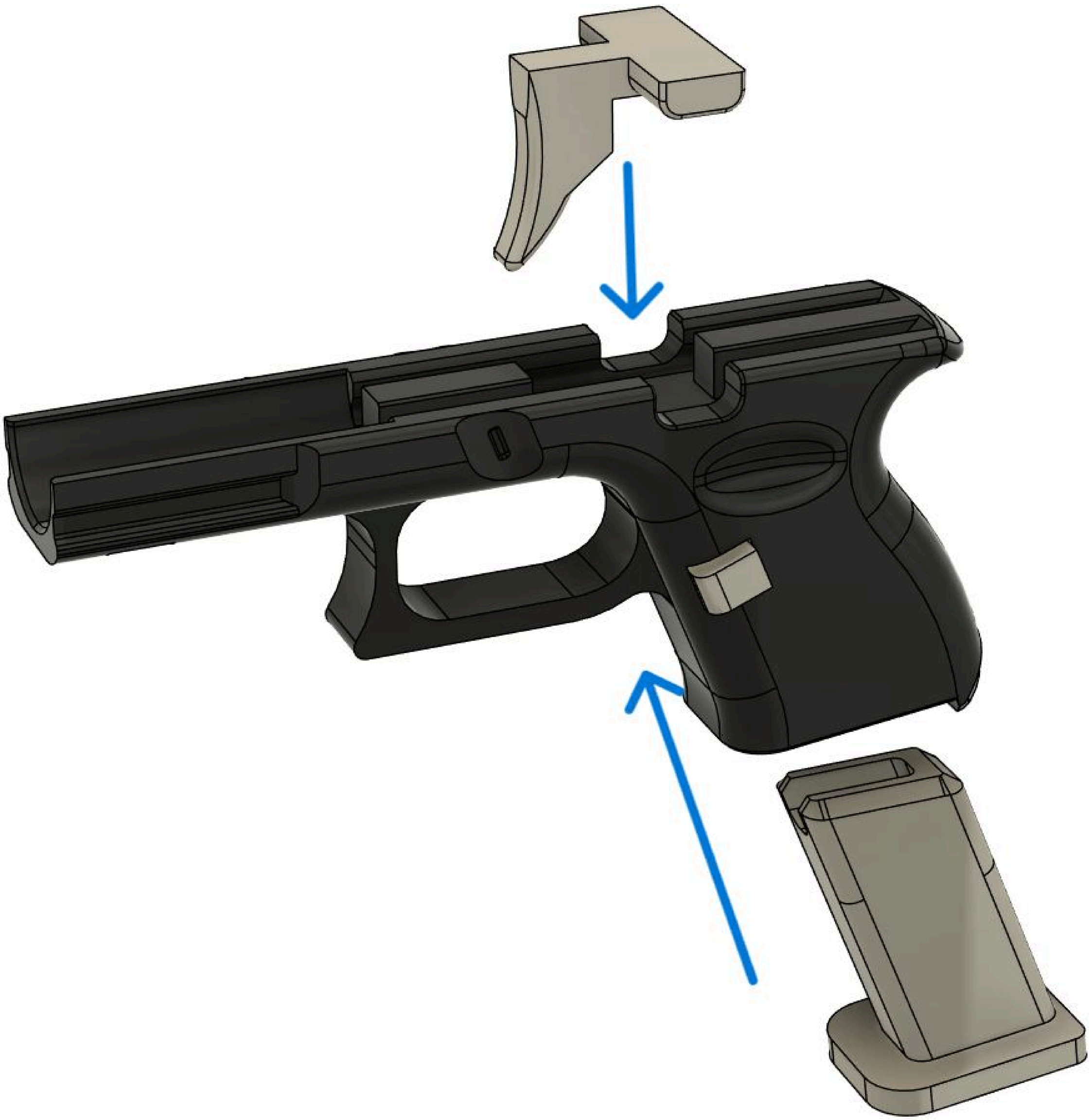

Glock

Fidget Keychain – Slide-Action Toy

ASSEMBLY GUIDE

